Downloaded from Arrow.com.

THIS COPY IS PROVIDED ON A RESTRICTED BASIS AND IS NOT TO BE USED IN ANY WAY DETRIMENTAL TO THE INTERESTS OF PANDUIT CORP.

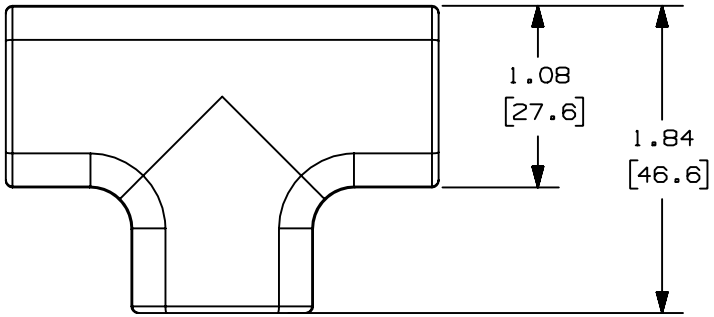

B C PANDUIT P/N	WEIGHT
TF5	1.29 LB/100 PCS. (584g/100 PCS.)

D NOTES:

1. SEE CURRENT CATALOG FOR ADDITIONAL PART NUMBER SUFFIXES TO INDICATE COLOR AND OR PACKAGE QUANTITY.
2. DIMENSIONS IN PARENTHESIS ARE IN METRIC.

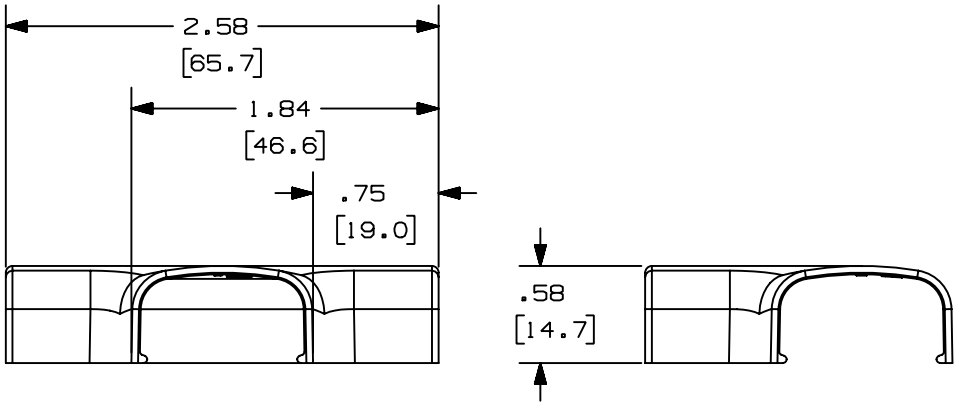

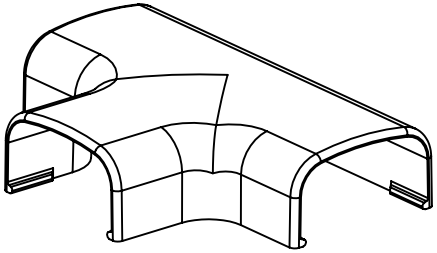

E

REV	DATE	BY	CHK	DESCRIPTION	ECN - R		CUST	SUP
6	7-8-02	JHN	RMHI	F. REVISED MATERIAL IN DRAWING TITLE BLOCK.	19158	RGRO	RGRO	
5	8-28-00	MSO	HIW	E. REVISED AND REDRAWN ON CAD.	19158	HIW	HIW	
4	10-3-91	DW	CF	D. REVISED NOTE AND REMOVED COLOR FROM DRAWING.	19158		CF	
3	2-28-91	DW	CF	C. REVISED COLORS: OMIT BG, LI, LG. ADDED INT. WHITE AND INT. GRAY.	19158		WJB	
2	12-2-87	LDB	WJB	B. ADDED PART NUMBERS TF5EI AND TF5LI.	19158		WJB	
1	10-1-84	CEW	HP	A. POLYSTYRENE WAS ABS.	19158		AJC	
R	8-14-84	RS	HP	DRAWING RELEASED	19158			

CAD FILENAME/LAYERS: D34474BE_DC_TF5_01.prt

PANDUIT CORP. TINLEY PARK, ILLINOIS

TEE FITTING
(TF5)
CUSTOMER DRAWING

UNLESS OTHERWISE SPECIFIED, DIMENSIONAL TOLERANCES ARE:
(.X) ± (.XXX) ±
(.XX) ±.03(.8) ANGLES ±

UNLESS OTHERWISE SPECIFIED, ALL DIMENSIONS ARE GIVEN IN INCHES, THIRD ANGLE PROJECTION.

DRAWN BY: RS
DATE: 8-8-84
CHK'D: HP A

MAT'L: ABS F

SCALE: FULL

DRAWING NO.: SS-19158

DWG SIZE: A